Revision History				
Rev	ECN #	Approved Date	Approved by	Notes
N/A	N/A	N/A	N/A	N/A

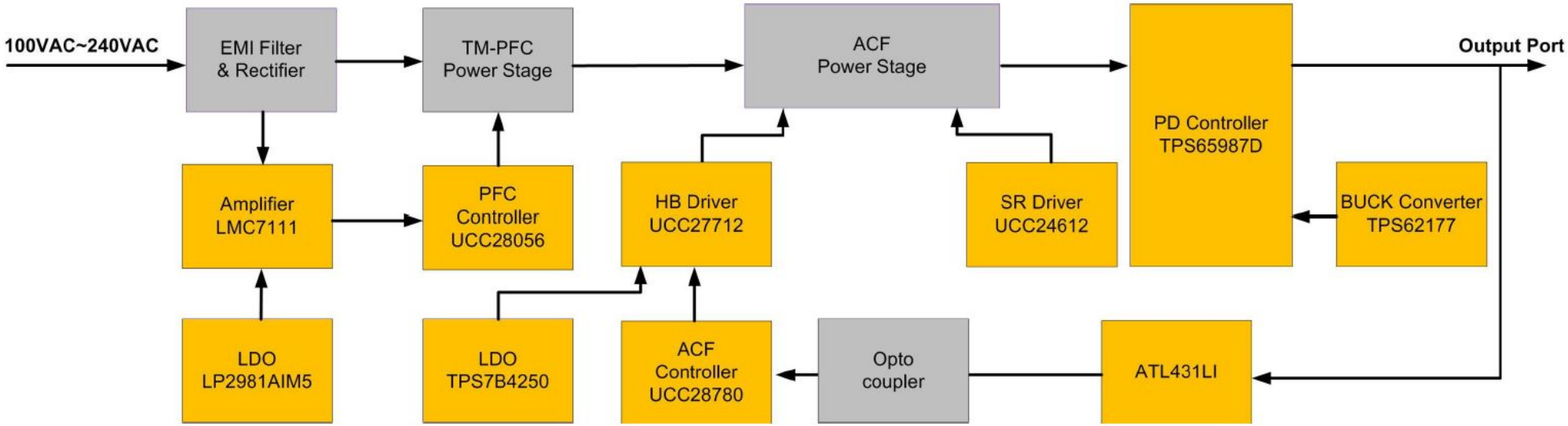

Texas Instruments and/or its licensors do not warrant the accuracy or completeness of this specification or any information contained therein. Texas Instruments and/or its licensors do not warrant that this design will meet the specifications, will be suitable for your application or fit for any particular purpose, or will operate in an implementation. Texas Instruments and/or its licensors do not warrant that the design is production worthy. You should completely validate and test your design implementation to confirm the system functionality for your application.

Orderable:	Designed for: Public Release	Mod. Date: 2019/12/18
TID #: 010047	Project Title: 100W Type-C PD3.0 ACDC Adapter	
Number: TIDA-010047 Rev: E1	Sheet Title:	
SVN Rev: Version control disabled	Assembly Variant: [No Variations]	Sheet: 1 of 3
Drawn By:	File: 100W Cover Sheet.SchDoc	Size: B
Engineer: Cheng Liu	Contact: http://www.ti.com/support	

Texas Instruments
http://www.ti.com

© Texas Instruments 2016

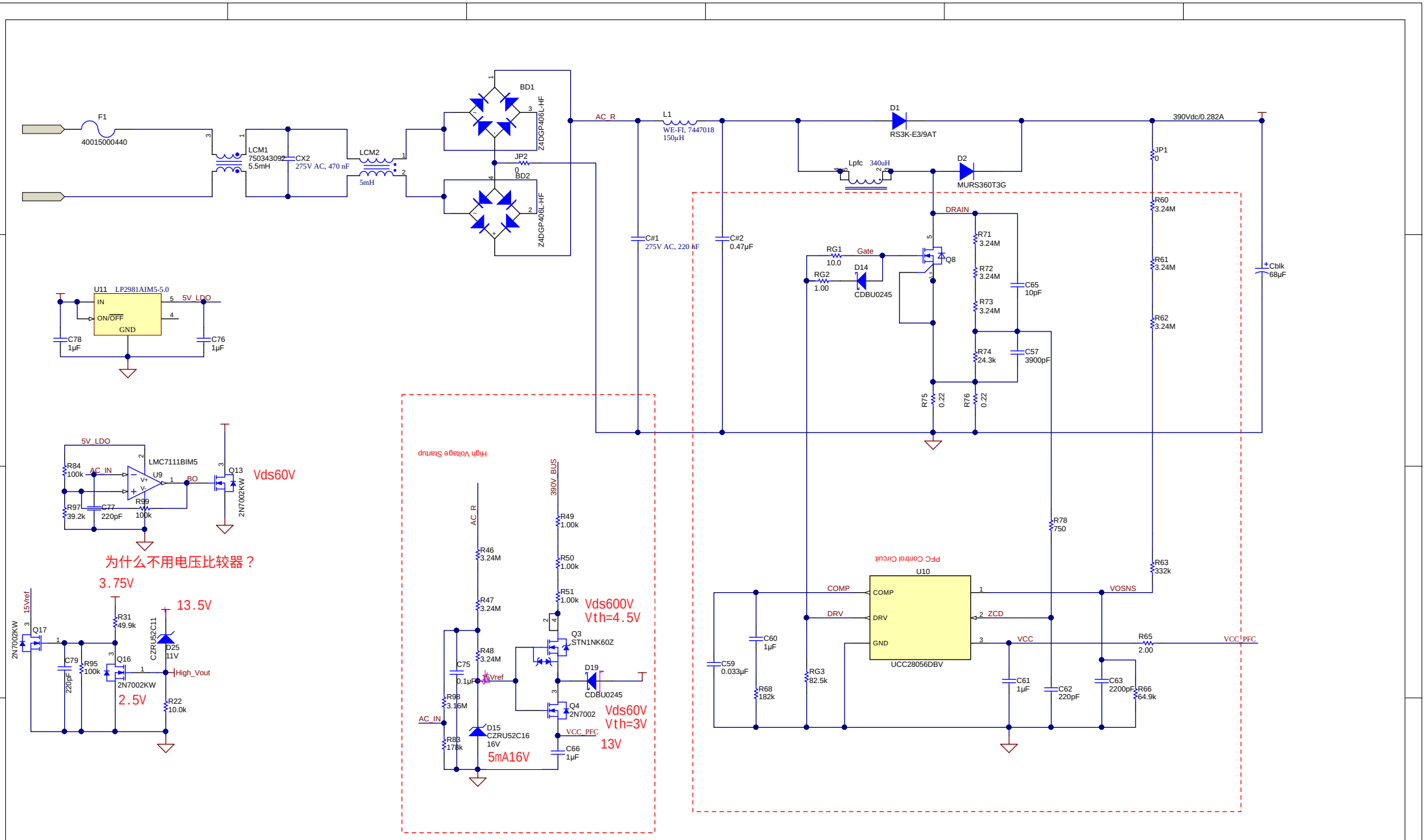

Orderable:		Designed for: Public Release	Mod. Date: 2019/12/6
TID #: 010047		Project Title: 100W Type-C PD3.0 ACDC Adapter	
Number: TIDA-010047	Rev: E1	Sheet Title:	
SVN Rev: Version control disabled		Assembly Variant: [No Variations]	Sheet: 2 of 3
Drawn By:		File: 100W PFC Sheet.SchDoc	Size: B
Engineer: Cheng Liu		Contact: http://www.ti.com/support	

Texas Instruments and/or its licensors do not warrant the accuracy or completeness of this specification or any information contained therein. Texas Instruments and/or its licensors do not warrant that this design will meet the specifications, will be suitable for your application or fit for any particular purpose, or will operate in an implementation. Texas Instruments and/or its licensors do not warrant that the design is production worthy. You should completely validate and test your design implementation to confirm the system functionality for your application.

Texas Instruments
http://www.ti.com
© Texas Instruments 2016

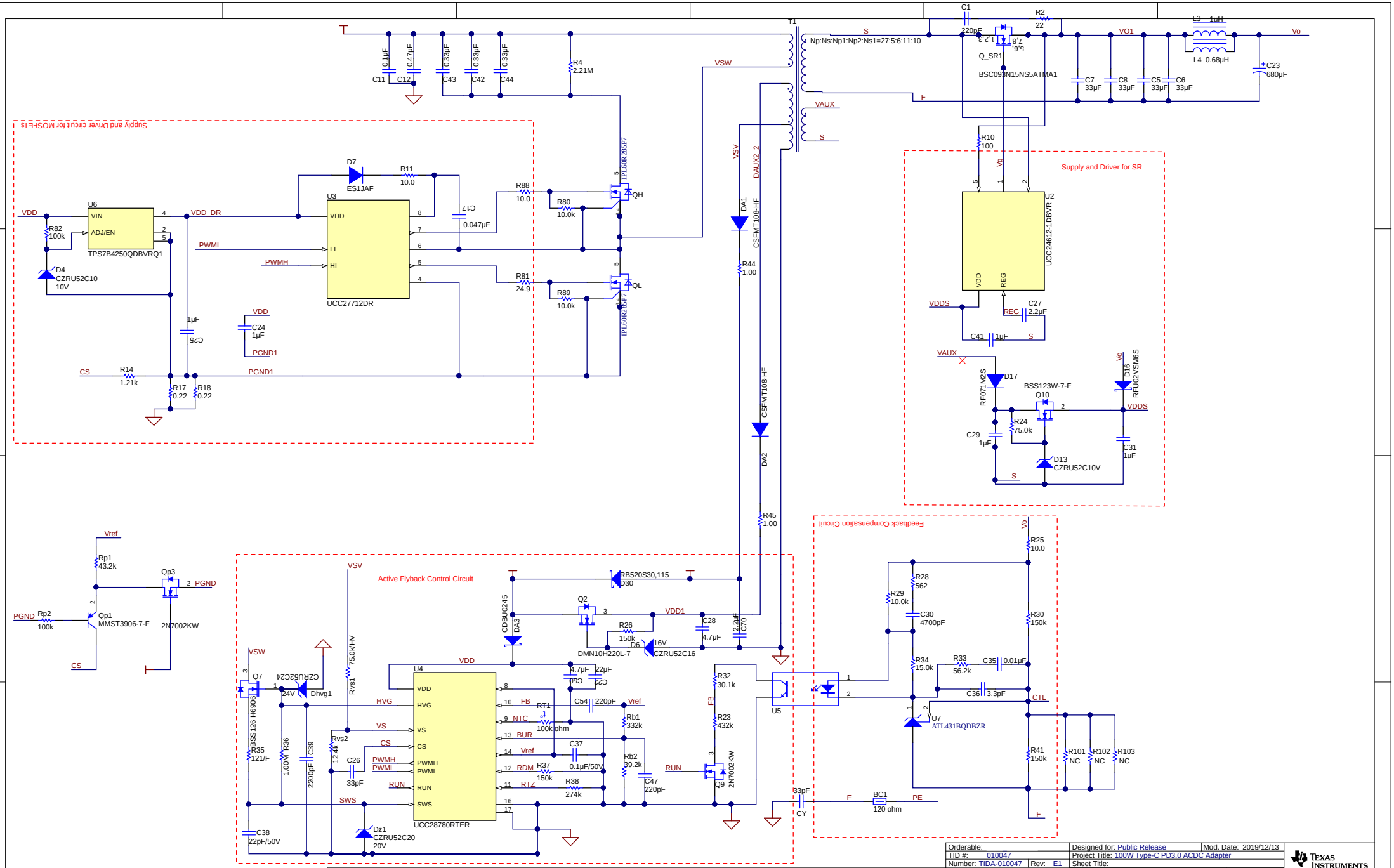

Orderable:		Designed for: Public Release	Mod. Date: 2019/12/13
TID #: 010047		Project Title: 100W Type-C PD3.0 ACDC Adapter	
Number: TIDA-010047	Rev: E1	Sheet Title:	
SVN Rev: Version control disabled		Assembly Variant: [No Variations]	Sheet: 2 of 3
Drawn By:		File: 100W ACF Sheet.SchDoc	Size: B
Engineer: Cheng Liu		Contact: http://www.ti.com/support	

Texas Instruments and/or its licensors do not warrant the accuracy or completeness of this specification or any information contained therein. Texas Instruments and/or its licensors do not warrant that this design will meet the specifications, will be suitable for your application or fit for any particular purpose, or will operate in an implementation. Texas Instruments and/or its licensors do not warrant that the design is production worthy. You should completely validate and test your design implementation to confirm the system functionality for your application.

Texas Instruments
http://www.ti.com
© Texas Instruments 2016

PCB Number: TIDA-010047
PCB Rev: E1

PCB
LOGO
Pb-Free Symbol

PCB
LOGO
FCC disclaimer

Logo4

DANGER HIGH VOLTAGE

LOGO6

LOGO7

LOGO8

LOGO9

Variant/Label Table	
Variant	Label Text
001	ChangeMe!
002	ChangeMe!

Texas Instruments and/or its licensors do not warrant the accuracy or completeness of this specification or any information contained therein. Texas Instruments and/or its licensors do not warrant that this design will meet the specifications, will be suitable for your application or fit for any particular purpose, or will operate in an implementation. Texas Instruments and/or its licensors do not warrant that the design is production worthy. You should completely validate and test your design implementation to confirm the system functionality for your application.

Orderable:	Designed for: Public Release	Mod. Date: 2019/3/22
TID #: 010047	Project Title: 100W Type-C PD3.0 ACDC Adapter	
Number: TIDA-010047 Rev: E1	Sheet Title:	
SVN Rev: Version control disabled	Assembly Variant: [No Variations]	Sheet: 3 of 3
Drawn By:	File: 100W Hardware.SchDoc	Size: B
Engineer: Cheng Liu	Contact: http://www.ti.com/support	

Texas Instruments
http://www.ti.com

© Texas Instruments 2016